DETAIL A
SCALE 2 : 5

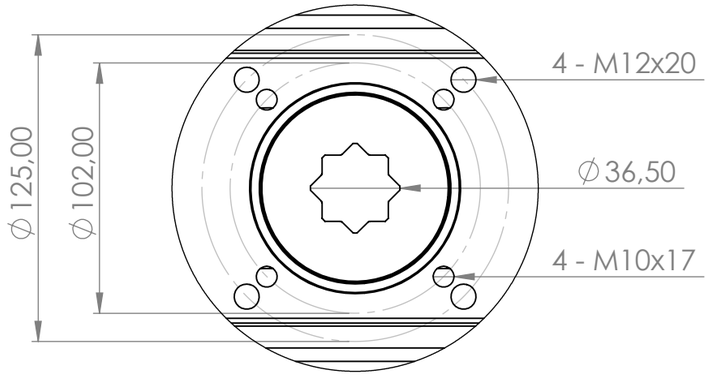

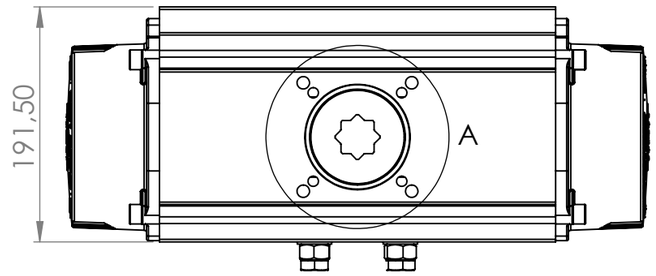

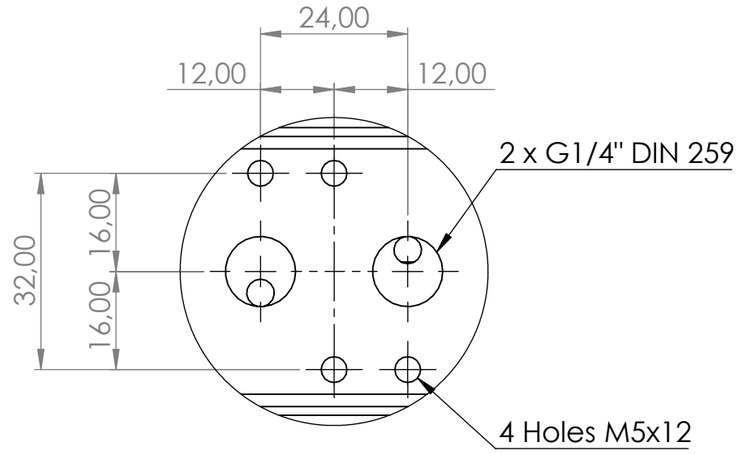

DETAIL B
SCALE 1 : 1

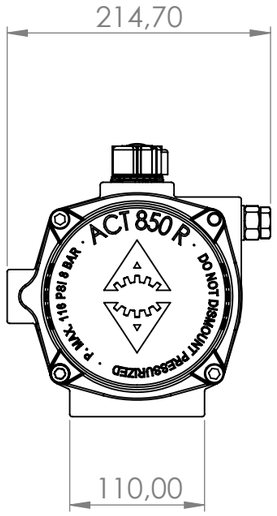

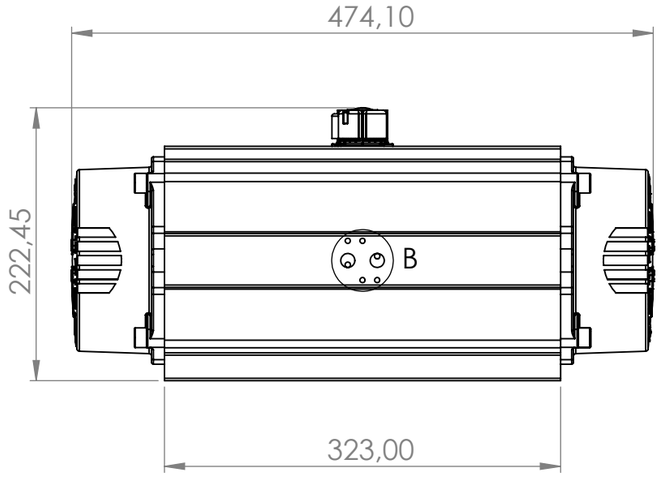

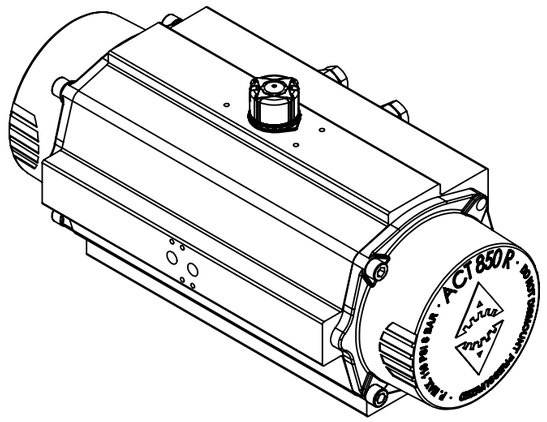

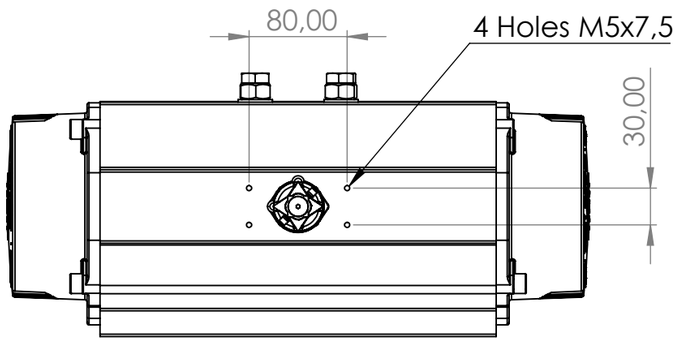

Nominal sizes																
more than	0,5	3	6	30	120	400	1000	2000	4000
up to	3	6	30	120	400	1000	2000	4000	
Admis. Dif. s/.DIN 7168 medium	±0.1	±0.1	±0.2	±0.3	±0.5	±0.8	±1.2	±2

Rev.	Modification	Date	Nam.

(Admis. dif. with sizes without tolerances)

DIN 7168 Medium

(Surface)

	Date	Name
Draw	27/10/2021	GSR
Chec	27/10/2021	PBC
Norm.		

ACTREG
C/ de l'Energia 15-25, Naves 1-2 Gavà, 08850
Tel. + (34) 936 61 44 10
www.actreg.com

Scale: 1:5 | Weight: | Pos:

Material:
Pattern nº:

Rack & Pinnion Series

ASR 0850

Single acting

Drawing nº: ASR0850 | 0 | Sheet 1/1 | A3

Subs. a: | Subs. by:

This drawing is our property. It is strictly forbbiden to use the drawing, to give it to third parties or to reproduce it totally or partially without our permission.