DETAIL A
SCALE 1 : 5

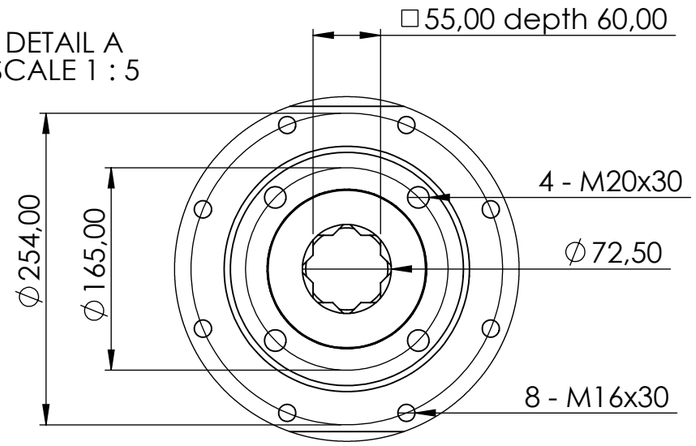

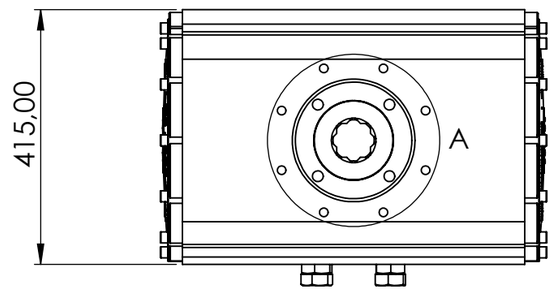

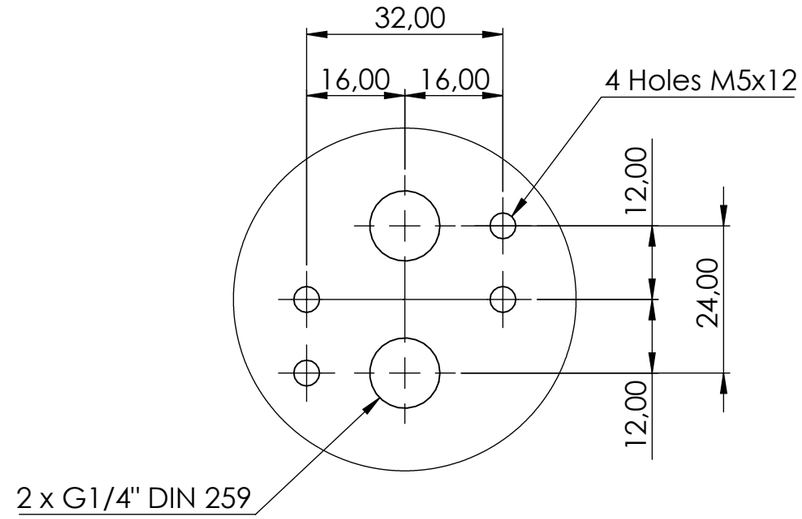

DETAIL B
SCALE 1 : 1

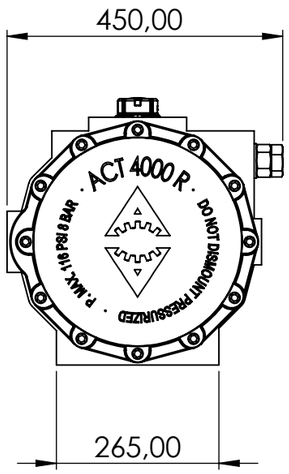

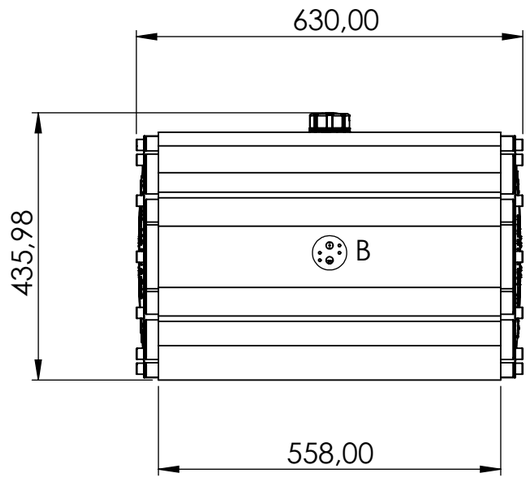

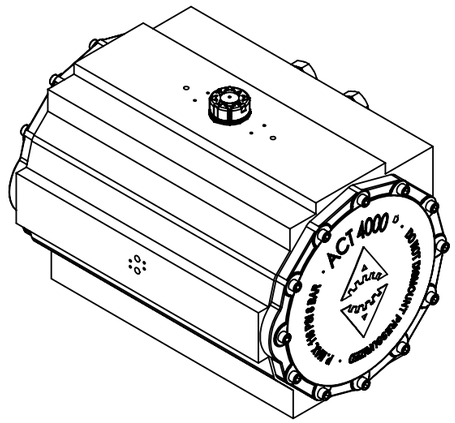

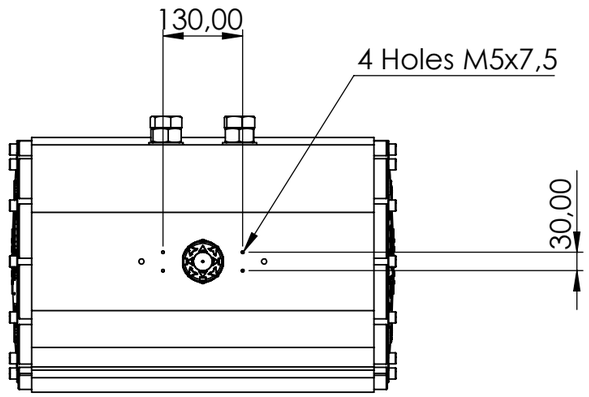

| Nominal sizes | | |